# SchachtFIX 1500

## Automatic manhole grab

for precast manhole units

**Euro Test**

Voluntary type examination based on EU legislation and European standards.

Testing body: DGUV Test, Construction Division.
Mark holder: BG BAU.



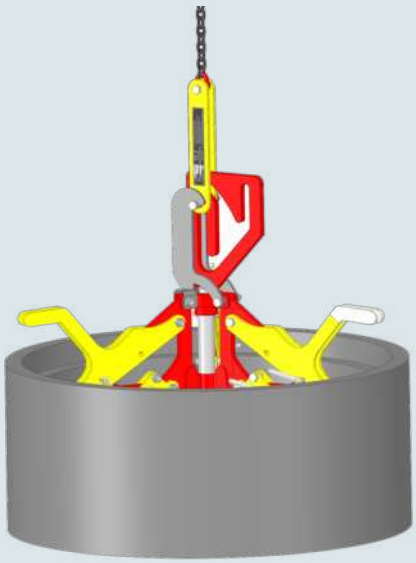

| 2.5 t | 600 – 1,500 mm | DN 1200 | BG BAU |
|---|---|---|---|
| Max. capacity | Manhole units ID | Cones and bases max. | subsidised |

### Versions and technical data

| Art. no. | Version | Manhole units ID | Capacity |
|---|---|---|---|
| **80000** | SchachtFIX -V- base unit | 600 / 625 / 800 mm | 2.5 t |
| **80010** | 3 supports 1000 | 1,000 mm | 2.5 t |
| **80100** | SchachtFIX SW / -V- 3 extensions 1500 | 1,000 mm | 2.5 t |
| | | 1,200 / 1,500 mm | 2.0 t |
| Bases max. | | DN 1200 | |
| Cones max. | | DN 1200 | |
| Weight | | 100 kg | |

### For round precast manhole units

ID from 600 mm - 1,500 mm

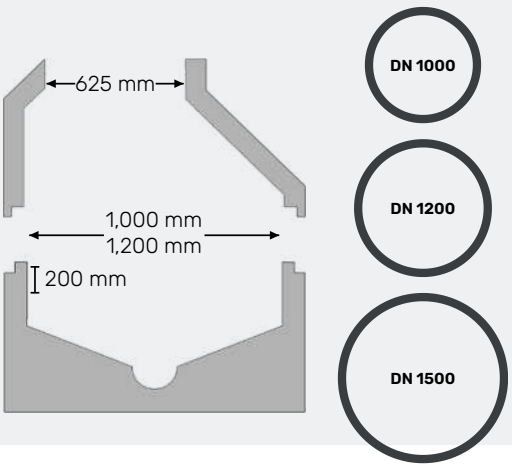


### FEATURES

- ✓ Suitable for **manhole rings** with an internal diameter of **Ø 600, 625, 800, 1,000, 1,200** and **1,500 mm**
- ✓ Mechanical **hooking and unhooking** by the operator alone, **without** additional **personnel**
- ✓ **No protruding parts** outside the rings
- ✓ **Simple** and reliable **handling**
- ✓ **Manhole cones** and **bases** up to **max. DN 1200** can be lifted
- ✓ All **manhole units**, especially cones, **hang** perfectly **level**
- ✓ **Low-wear** thanks to high-quality workmanship
- ✓ **Quick payback** through time and cost savings

### – BG BAU –
### SUBSIDISED

**Work safely with SchachtFIX – and get a subsidy!** BG BAU (German statutory accident insurance for construction) supports companies buying SchachtFIX systems. We are happy to help with the paperwork.

1. Check eligibility
2. Request a quote from us
3. Apply to BG BAU
4. Buy the unit, receive the subsidy