PRODUCT CATALOGUE 2027/2028

MORE OUTPUT IN SEWER WORK.

Attachments for excavators and wheel loaders

One call.
One solution.

+49 8349 97699-14

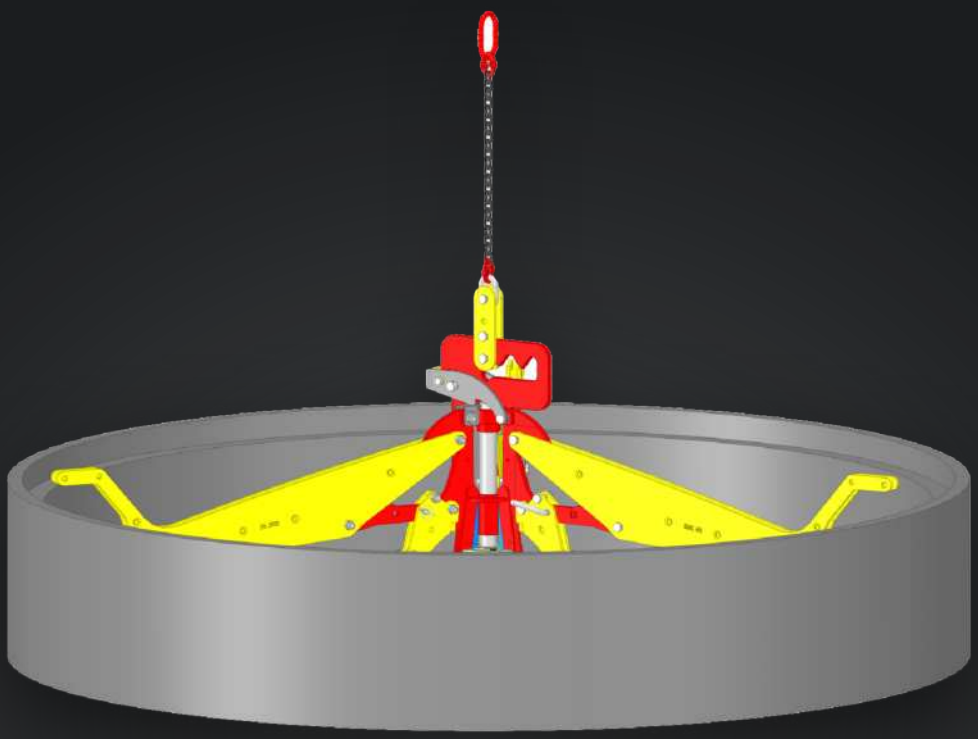

HydroFIX | MultiFIX | PipeFIX | RohrEindrücker | VerbauGreifer
KabelFIX | GeräteWender | VerbauHaken | PlattenGreifer | SchachtFIX
SenkkastenFIX | BeGuFIX | Transport racks | Attachment adapters

Schmölz
SchachtFIX
und Baugeräte GmbH

schacht-fix.de
Including all technical data

✓ **Euro Test certified** ✓ **BG BAU subsidy** ✓ **Made in Germany**

Contents

Product overview Model year 2027/2028

Schmölz SchachtFIX & Baugeräte GmbH

PIPE GRABS

Hydro**FIX**	Hydraulic pipe grab for concrete pipes DN 300 - DN 1300	Page **4**
NEW Hydro**FIX** light	Hydraulic pipe grab for concrete pipes DN 150 - DN 800	Page **6**
NEW Hydro**FIX** casing pipe grab	Hydraulic pipe grab OD 200 - OD 1500	Page **8**
Multi**FIX** mechanical	Mechanical pipe grab for concrete pipes up to DN 800	Page **10**
Multi**FIX** XL	Mechanical pipe grab for concrete pipes up to DN 1000	Page **11**
Pipe**FIX** 500	Mechanical pipe grab for concrete pipes up to DN 500	Page **12**
Pipe**FIX** Medium	Mechanical pipe grab for various pipes up to DN 500	Page **14**
Pipe**FIX** Light	Mechanical pipe grab for various pipes up to DN 300	Page **15**
Rohr**Eindrücker**	Pipe pushing adapter with rotating device	Page **16**

SPECIAL EQUIPMENT

Verbau**Greifer**	Trench box grab for OilQuick & LIKUFIX adapters	Page **18**
Kabel**FIX**, Kabel**FIX** light	Attachment for OilQuick/LIKUFIX adapters	Page **20**
Geräte**Wender QuickRotator**	Efficient work with attachments for OilQuick and LIKUFIX systems	Page **22**
Verbau**Haken**	For extracting stuck trench boxes	Page **23**
Platten**Greifer**	Shoring panel grab for OilQuick & LIKUFIX adapters	Page **24**

MANHOLE GRABS

Schacht**FIX SW**	Automatic manhole grab with stepping mechanism for precast concrete plants	Page **26**
Schacht**FIX 1000**	Automatic manhole grab for precast manhole units up to 1,000 mm internal diameter	Page **28**
Schacht**FIX 1500**	Automatic manhole grab for precast manhole units up to 1,500 mm internal diameter	Page **29**
Senkkasten**FIX**	Mechanical grab for gully bases	Page **30**
Schacht**FIX Light**	Mechanical manhole grab for upright concrete pipes	Page **31**
BeGu**FIX**	Lifting device for BeGu manhole covers	Page **32**

TRANSPORT RACKS, ADAPTERS

Transport **racks**	Solution for transporting and storing lifting devices	Page **34**
Attachment **adapters**	MFK, S-10° and S-42° plus frame	from page **36**


















HydroFIX

Hydraulic pipe grab

DN 300 - DN 1300

Euro Test

Voluntary type examination based on EU legislation and European standards.

Testing body: DGUV Test, Construction Division.
Mark holder: BG BAU.



up to 8.0 t	400 – 1,600 mm	1.0 t	660 – 860 kg
Capacity	Pipe OD	Push force	Weight

1 Base unit

OD to scale
○ max. ◌ min.
1 m

+ 3 interchangeable gripping arm sets
for all pipes from DN 300 – DN 1300

Arm set	DN 300 – DN 600	DN 700 – DN 1000	DN 1000 – DN 1300
Capacity	2.5 t	5.0 t	max. 8.0 t*
Push force	1.0 t	1.0 t	1.0 t
OD min.	400 mm	770 mm	1,260 mm
OD max.	760 mm	1,250 mm	1,600 mm
Pressure open	120 bar	120 bar	120 bar
Pressure close	150 bar	230 bar	300 bar
GRP pipes close	70 bar	70 bar	70 bar
Weight	660 kg	760 kg	860 kg
Max. grab width	1,110 mm	1,630 mm	2,000 mm

Available in rigid and swinging versions

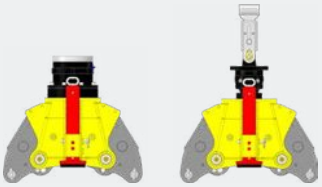

rigid
Art. no. 80905

swinging
Art. no. 80910

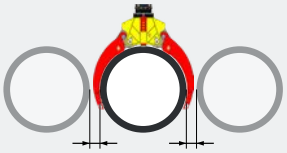

Pipe spacing **min. 200 mm**

VERSIONS

80905	**HydroFIX head, rigid**
80910	**HydroFIX head, swinging**
80930	HydroFIX arm set 1300
80931	HydroFIX arm set 1000
80932	HydroFIX arm set 600

Compatible with attachment adapter, pages 36 & 37

FEATURES

- ✓ **One base unit with three interchangeable gripping arm sets** for all pipes from DN 300 – DN 1300
- ✓ **Fully hydraulic** with rotation
- ✓ **Off-centre load pick-up** thanks to rigid suspension of the grab on the rotary motor
- ✓ **One-person operation** by the operator
- ✓ **Precise positioning and threading** of pipes when working in trench shoring
- ✓ Designed for **pushing in pipes up to DN 1300**

Schmölz SchachtFix & Baugeräte GmbH | Tel. +49 (0) 8349 9720 | vertrieb@schachtfix.info | schacht-fix.de

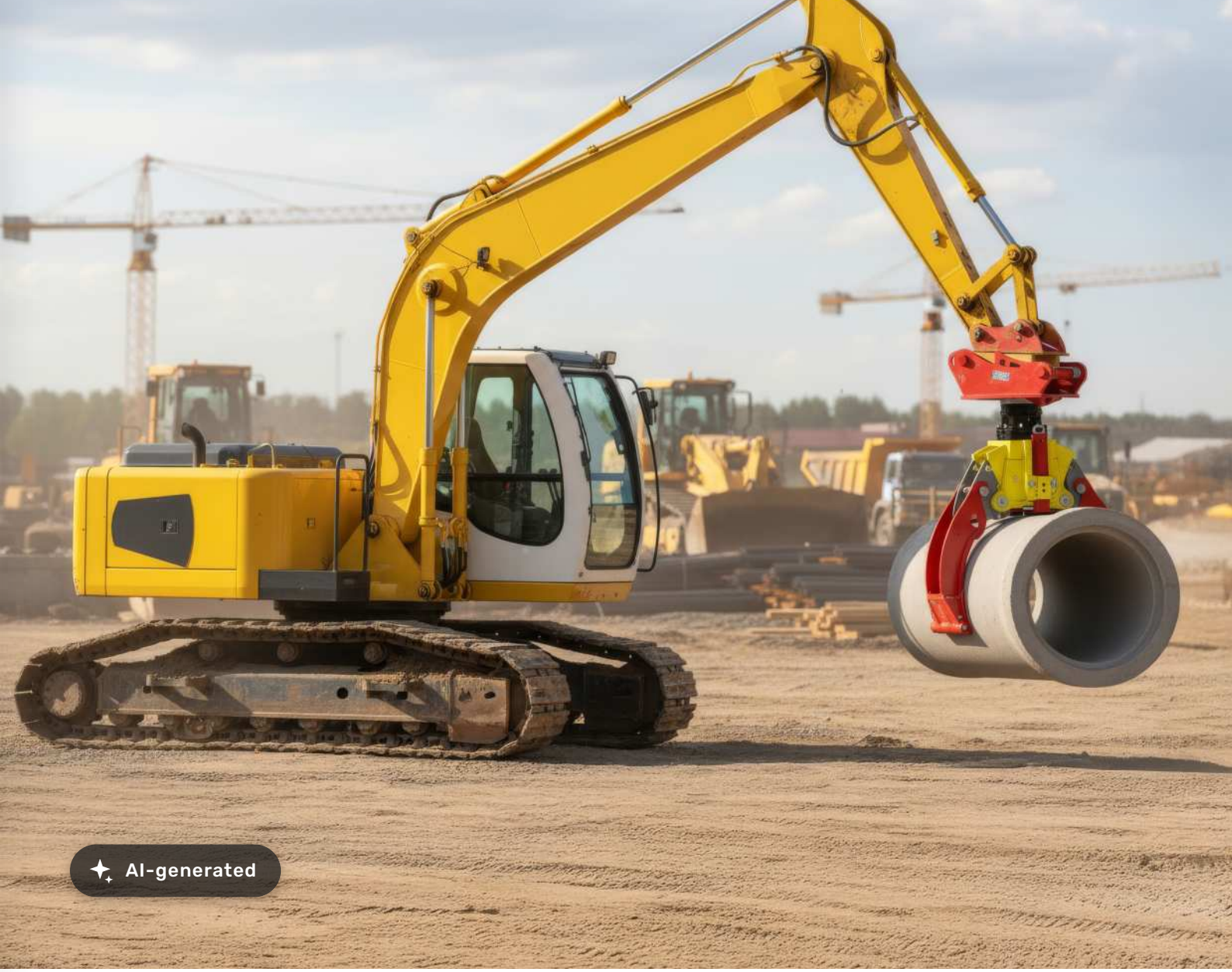
AI-generated

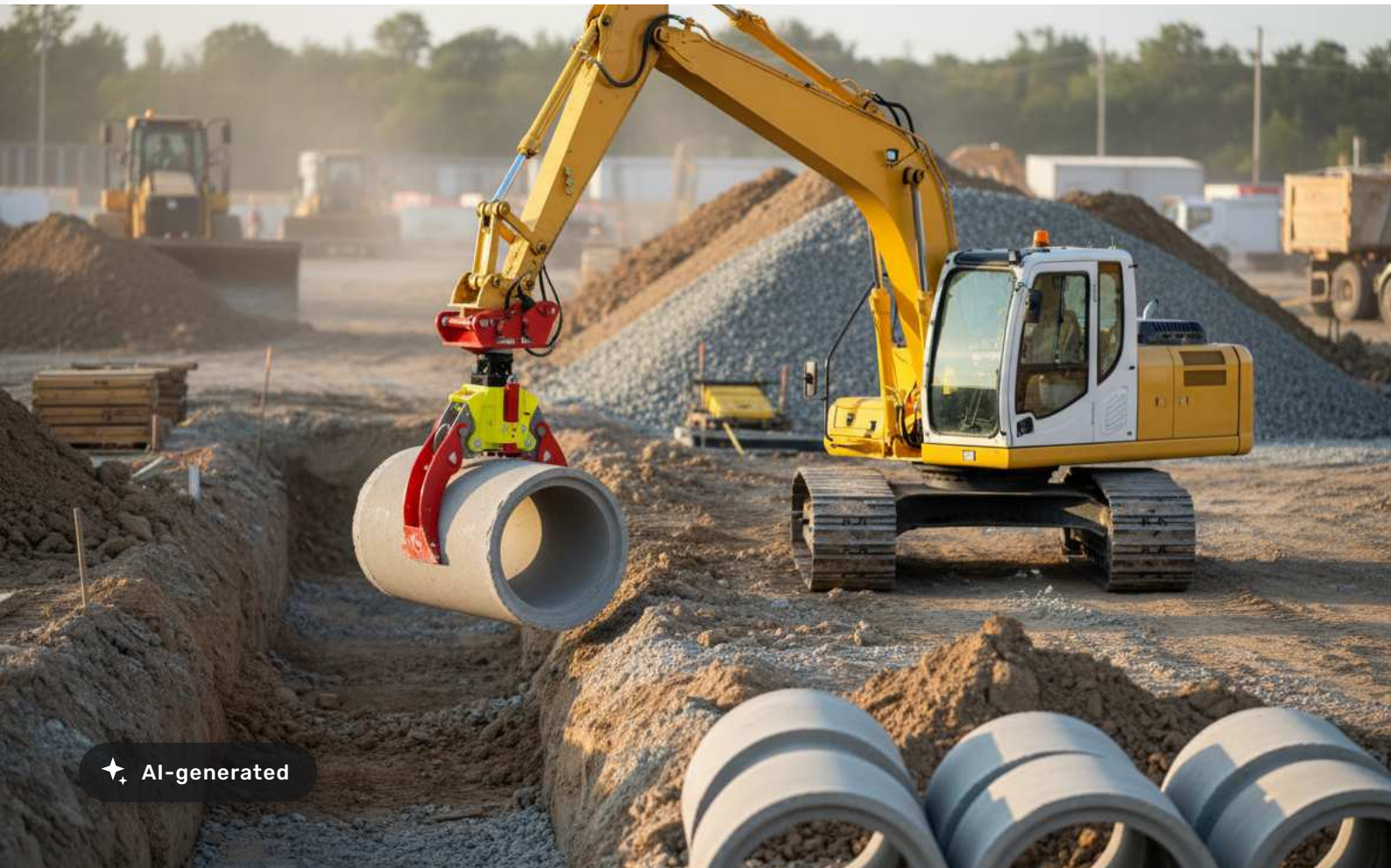
AI-generated

HydroFIX light

Hydraulic pipe grab

DN 150 - DN 800

NEW



up to 2.5 t	155 – 1,010 mm	up to 1.0 t	400 – 465 kg
Capacity	Pipe OD	Push force	Weight

1 Base unit

+ 3 interchangeable gripping arm sets
for all pipes from DN 150 – DN 800

OD to scale
○ max. ◌ min.
1 m

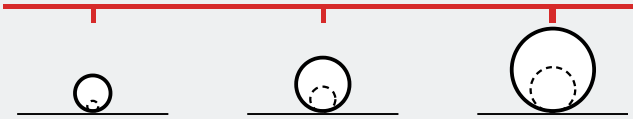

Arm set	DN 150 – DN 300	DN 300 – DN 500	DN 400 – DN 800
Capacity	1.5 t	2.0 t	2.5 t
Push force	0.0 t - 1.0 t	0.0 t - 1.0 t	0.0 t - 1.0 t
OD min.	155 mm	320 mm	550 mm
OD max.	460 mm	670 mm	1,010 mm
Pressure open	120 bar	120 bar	120 bar
Pressure close	70 bar	80 bar	170 bar
GRP pipes close	50 bar	50 bar	50 bar
Weight	400 kg	420 kg	465 kg
Max. grab width	840 mm	920 mm	1,330 mm

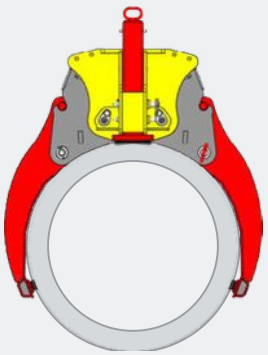

Pipe spacing **min. 150 mm**

VERSIONS

80990	**HydroFIX Light head, rigid**
80991	**HydroFIX Light head, swinging**
80995	HydroFIX Light arm set 800
80996	HydroFIX Light arm set 500
80997	HydroFIX Light arm set 300

Schmölz SchachtFix & Baugeräte GmbH | Tel. +49 (0) 8349 9720 | vertrieb@schachtfix.info | schacht-fix.de

Available in rigid and swinging versions

RIGID VERSION



Art. no. **80990**

Components	DN 150 – DN 300	DN 300 – DN 500	DN 400 – DN 800
e.g. OQ 70/55 S	240 kg	240 kg	240 kg
Rotor ARB 80	77 kg	77 kg	77 kg
HydroFIX Light	400 kg	420 kg	465 kg
Total weight	**717 kg**	**737 kg**	**782 kg**

Compatible with attachment adapter, page 37

SWINGING VERSION

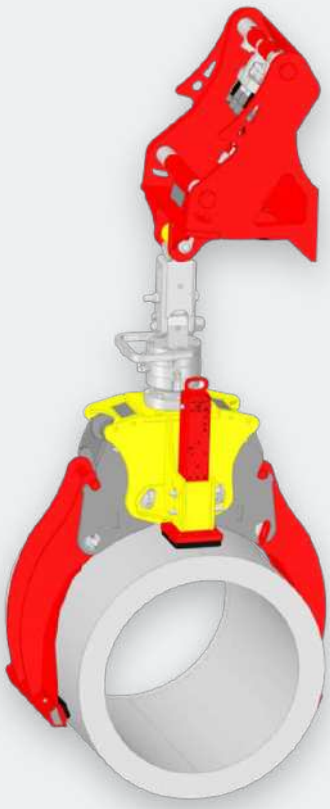

Art. no. **80991**

Components	DN 150 – DN 300	DN 300 – DN 500	DN 400 – DN 800
e.g. OQ 70/55 MFK	260 kg	260 kg	260 kg
Cardan	31 kg	31 kg	31 kg
Rotor ARH 70	54 kg	54 kg	54 kg
HydroFIX Light	400 kg	420 kg	465 kg
Total weight	**745 kg**	**765 kg**	**810 kg**

Compatible with attachment adapter, page 36

FEATURES

- ✓ **Compact, lightweight design:** Perfect for confined spaces.
- ✓ **Fully hydraulic control:** for precise and efficient work straight from the excavator.
- ✓ **Optimised geometry:** Ideal for tight sites and closely stacked pipes.
- ✓ **Quick adjustment:** tool-free change between different pipe diameters.
- ✓ **Robust build:** Low-wear mechanics “Made in Germany”.

HydroFIX casing pipe grab

Hydraulic pipe grab

OD 200 - OD 1500

with adapter for
EXCAVATORS



up to 7.5 t	OD 200 – OD 1500	140 bar	1,050 – 1,250 kg
Capacity	Pipe OD	Pressure rotate	Weight

OD to scale
○ max. ◌ min.
1 m

	EXCAVATOR AND WHEEL LOADER		EXCAVATOR		
Arm set	**OD 540 – OD 880**	**OD 600 – OD 1200**	**OD 200 – OD 1000**	**OD 200 – OD 1300**	**OD 200 – OD 1500**
Art. no.	**80982**	**80981**	**80977**	**80978**	**80979**
Capacity	3.0 t	5.5 t	5.5 t	5.5 t	7.5 t
OD min.	540 mm	600 mm	200 mm	200 mm	200 mm
OD max.	880 mm	1,200 mm	1,000 mm	1,300 mm	1,500 mm
Pressure open	200 bar	200 bar	200 bar	200 bar	200 bar
Pressure close	300 bar	300 bar	300 bar	300 bar	300 bar
Pressure rotate	140 bar	140 bar	–	140 bar	140 bar
Weight	1,050 kg	1,180 kg	1,070 kg	1,180 kg	1,250 kg

VERSIONS

ART. NO.	DESCRIPTION	WEIGHT
80982	HydroFIX casing pipe grab OD 540 - OD 880	1,050 kg
80981	HydroFIX casing pipe grab OD 600 - OD 1200	1,180 kg
80977	HydroFIX casing pipe grab OD 200 - OD 1000	1,070 kg
80978	HydroFIX casing pipe grab OD 200 - OD 1300	1,180 kg
80979	HydroFIX casing pipe grab OD 200 - OD 1500	1,250 kg
82015	Rotator	135 kg

EXCAVATOR ADAPTERS

ART. NO.	DESCRIPTION	WEIGHT
81601	OQ-80-S-42°	465 kg
81905	SW-66-S-42°	460 kg
81606	OQ-70/55-S-42°	320 kg
81915	SW-48-S-42°	350 kg

Compatible with attachment adapter, page 38

Schmölz SchachtFix & Baugeräte GmbH | Tel. +49 (0) 8349 9720 | vertrieb@schachtfix.info | schacht-fix.de

HydroFIX casing pipe grab

Hydraulic pipe grab

OD 540 - OD 1200

with adapter for
WHEEL LOADERS



FEATURES

- ✓ **Safe gripping of heavy casing pipes** with innovative Power Pad system and special rubber lining for maximum occupational safety
- ✓ **High load capacity up to 7.5 tonnes** for safe transport of even the heaviest casing pipes and cutting crowns
- ✓ Designed for **excavators and wheel loaders** – due to its weight, the large arm set OD 200 – OD 1500 works **exclusively** on excavators
- ✓ **Movable gripper plates adapt automatically to the pipe size –** adjustable to the millimetre from the excavator with a clear view
- ✓ **Hydraulic rotation with rotator** for millimetre-precise positioning and optimum manoeuvrability
- ✓ **Flexible pipe diameters OD 200 - OD 1500 with a clear scale** for quick adjustment to different pipe sizes
- ✓ **Robust design "Made in Germany"** for tough continuous use on large sites in specialist foundation engineering

VERSIONS

ART. NO.	DESCRIPTION	WEIGHT
80982	HydroFIX casing pipe grab OD 540 - OD 880	1,050 kg
80981	HydroFIX casing pipe grab OD 600 - OD 1200	1,180 kg
82015	Rotator	135 kg

WHEEL LOADER ADAPTERS

ART. NO.	DESCRIPTION	WEIGHT
82000	Wheel loader adapter L90 w/o LIKUFIX	440 kg
82001	Wheel loader adapter L90 with LIKUFIX	470 kg
82005	Wheel loader adapter L120 w/o LIKUFIX	
82006	Wheel loader adapter L120 with LIKUFIX	

Compatible with attachment adapter, page 38

MultiFIX mechanical

Mechanical pipe grab

For concrete and vitrified clay pipes up to DN 800

Euro Test

Voluntary type examination based on EU legislation and European standards.

Testing body: DGUV Test, Construction Division.
Mark holder: BG BAU.



2.5 t	420 - 1,010 mm	200 kg	80400
Capacity	Pipe OD	Weight	Art. no.

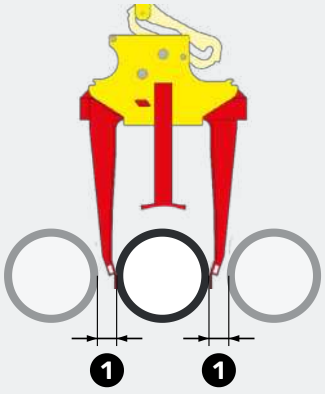

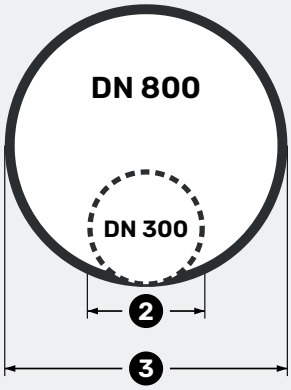

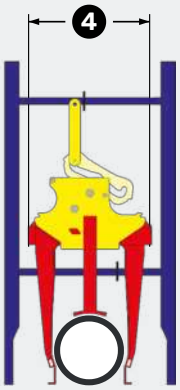

Concrete pipes

Infinitely adjustable from DN 300 to DN 800

1. Pipe spacing **min. 60 mm**
2. DN 300 • OD **min. 420 mm**
3. DN 800 • OD **max. 1,010 mm**
4. Width **750 mm**, work in trench shoring

VERSION

Pipes DN 300 - DN 800

Compatible with pipe pusher, page 16

FEATURES

- ✓ Quick, **tool-free adjustment** between **DN 300 – DN 800**
- ✓ **One-person operation** by the operator
- ✓ **Low-wear** thanks to high-quality workmanship
- ✓ **Excellent occupational safety**
- ✓ **Capacity 2.5 t**
- ✓ **No gripping arm change required**
- ✓ **Small lateral footprint** when working in trench shoring
- ✓ Unambiguous **DN-based setting**
- ✓ Ideal for lifting **tightly stacked pipes**
- ✓ **Low-maintenance** mechanics

Schmölz SchachtFix & Baugeräte GmbH | Tel. +49 (0) 8349 9720 | vertrieb@schachtfix.info | schacht-fix.de

MultiFIX XL

Mechanical pipe grab

For concrete pipes up to DN 1000

Euro Test

Voluntary type examination based on EU legislation and European standards.

Testing body: DGUV Test, Construction Division.
Mark holder: BG BAU.

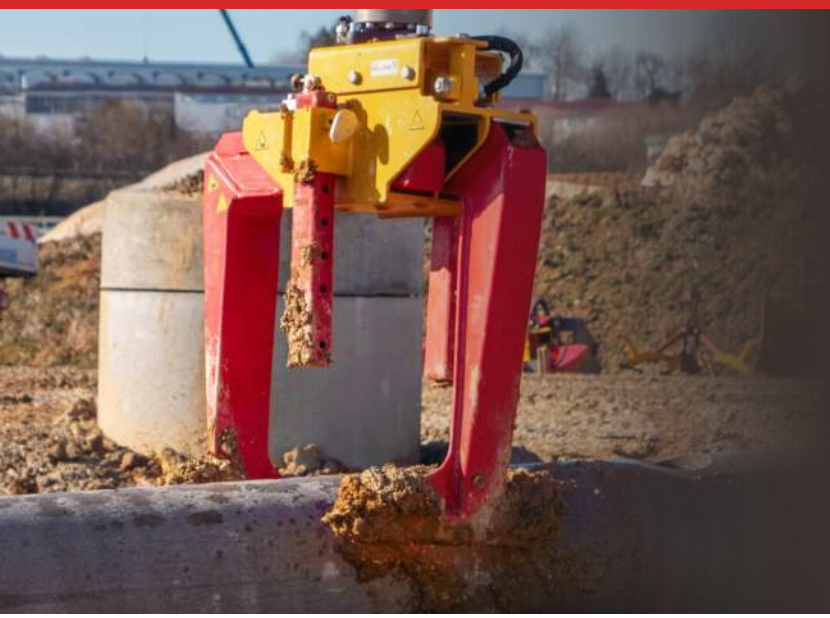



3.5 t	720 – 1,250 mm	320 kg	80450
Capacity	Pipe OD	Weight	Art. no.

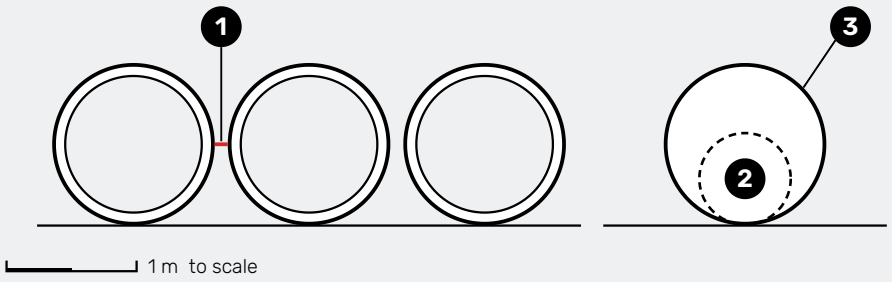

Concrete pipes

Infinitely adjustable from DN 600 to DN 1000

1. Pipe spacing **min. 100 mm**
2. DN 600 • OD **min. 720 mm**
3. DN 1000 • OD **max. 1,250 mm**

VERSION

Pipes DN 600 - DN 1000

Compatible with pipe pusher, page 16

FEATURES

- ✓ **One-person operation** by the operator
- ✓ **No gripping arm change required**
- ✓ **Small lateral footprint** when working in trench shoring
- ✓ Ideal for lifting **tightly stacked pipes**
- ✓ **Low-maintenance** mechanics & **capacity 3.5 t**
- ✓ Quick, **tool-free adjustment** between **DN 600 – DN 1000**
- ✓ Unambiguous **DN-based setting**
- ✓ **Low-wear** thanks to high-quality workmanship
- ✓ **Excellent occupational safety**

PipeFIX 500

Mechanical pipe grab

For concrete pipes up to DN 500

Euro Test

Voluntary type examination based on EU legislation and European standards.

Testing body: DGUV Test, Construction Division.
Mark holder: BG BAU.

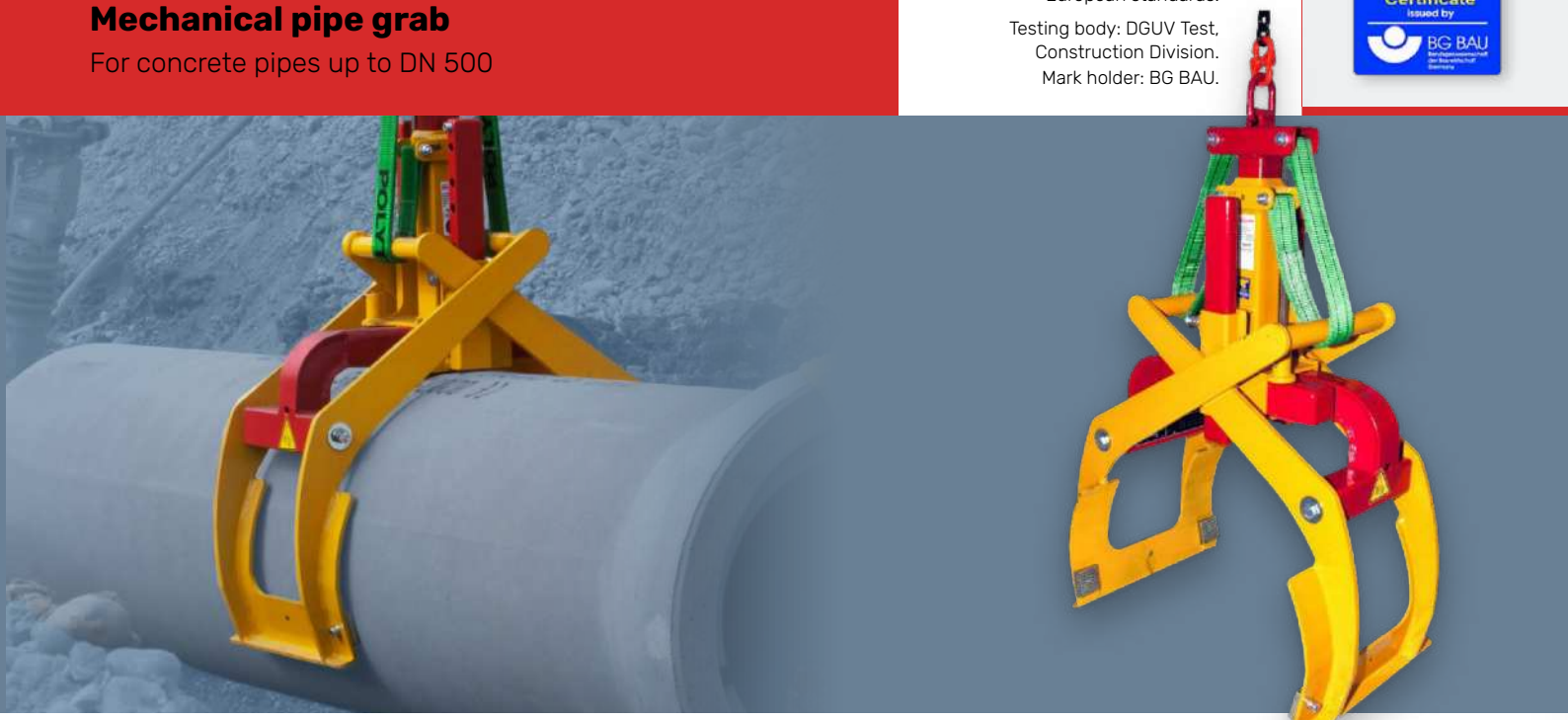

1.7 t	210 – 670 mm	110 kg	80200
Capacity	Pipe OD	Weight	Art. no.

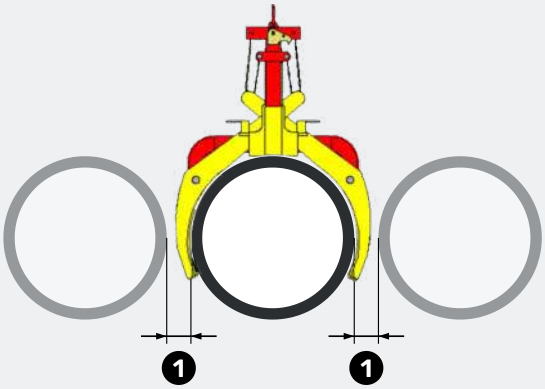

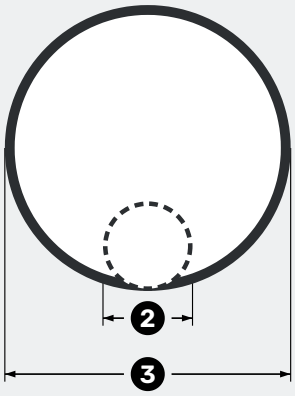

Concrete pipes
DN 200 - DN 500

1. Pipe spacing **min. 60 mm**
2. OD **min. 210 mm**
3. OD **max. 670 mm**

VERSION

DN 200 - DN 500 concrete

Compatible with pipe pusher, page 16

FEATURES

- ✓ **One-person operation** by the operator
- ✓ Unambiguous **DN-based setting**
- ✓ Ideal for lifting **closely spaced pipes**
- ✓ **Low-maintenance** mechanics
- ✓ Quick, **tool-free adjustment** between **DN 200 – DN 500**
- ✓ **Small lateral footprint** when working in trench shoring
- ✓ **Excellent occupational safety**

Schmölz SchachtFix & Baugeräte GmbH | Tel. +49 (0) 8349 9720 | vertrieb@schachtfix.info | schacht-fix.de


POLY
POLY

PipeFIX Medium

Mechanical pipe grab

For vitrified clay, cast iron and PVC pipes up to DN 500

Euro Test

Voluntary type examination based on EU legislation and European standards.

Testing body: DGUV Test, Construction Division.
Mark holder: BG BAU.

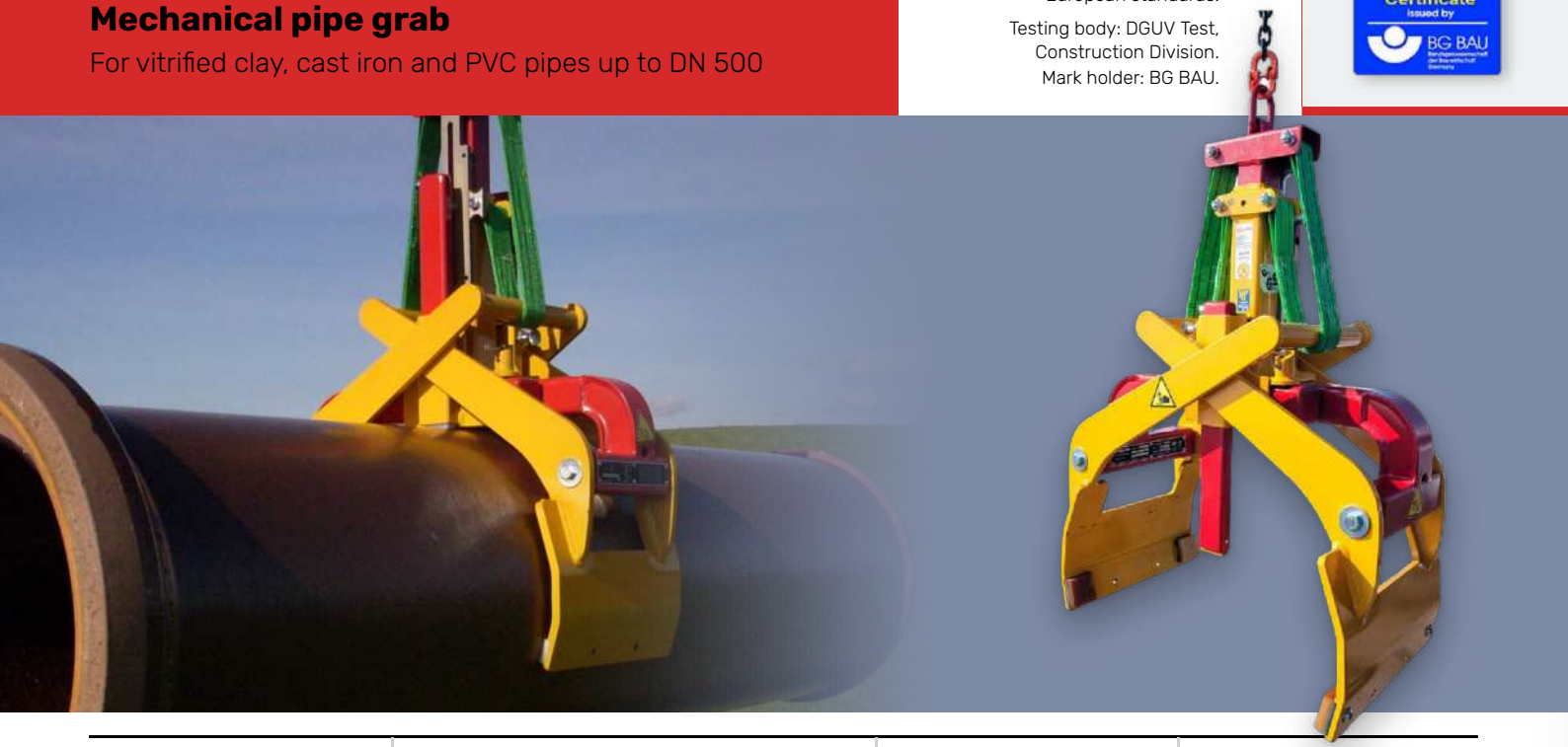

0.6 t	210 – 590 mm	100 kg	80250
Capacity	Pipe OD	Weight	Art. no.

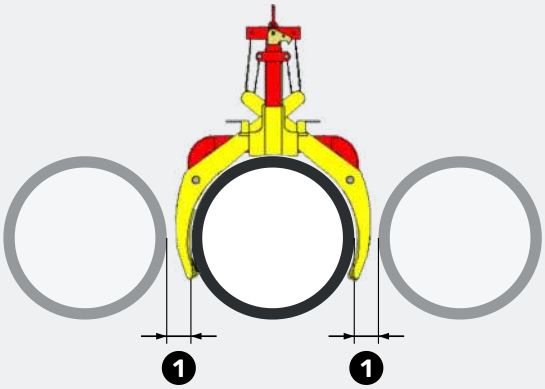

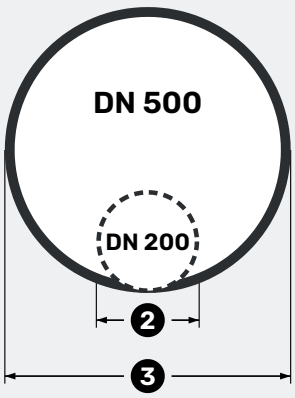

For vitrified clay, cast iron and PVC pipes

DN 200 - DN 500

1. Pipe spacing **min. 30 mm**
2. DN 200 • OD **min. 210 mm**
3. DN 500 • OD **max. 590 mm**

VERSION

DN 200 - DN 500

Vitrified clay, cast iron, PVC pipes

Compatible with pipe pusher, page 16

FEATURES

- ✓ Direct **removal of vitrified clay pipes from the stack without assistants**
- ✓ Quick, **tool-free adjustment** between **DN 200 – DN 500**
- ✓ **Small lateral footprint** when working in trench shoring
- ✓ **Excellent occupational safety**
- ✓ **One-person operation** by the operator
- ✓ Unambiguous **DN-based setting**
- ✓ Ideal for lifting **closely spaced pipes**
- ✓ **Low-maintenance** mechanics

Schmölz SchachtFix & Baugeräte GmbH | Tel. +49 (0) 8349 9720 | vertrieb@schachtfix.info | schacht-fix.de

PipeFIX Light

Mechanical pipe grab

For vitrified clay, cast iron and PVC pipes up to DN 300

Euro Test

Voluntary type examination based on EU legislation and European standards.

Testing body: DGUV Test, Construction Division.
Mark holder: BG BAU.

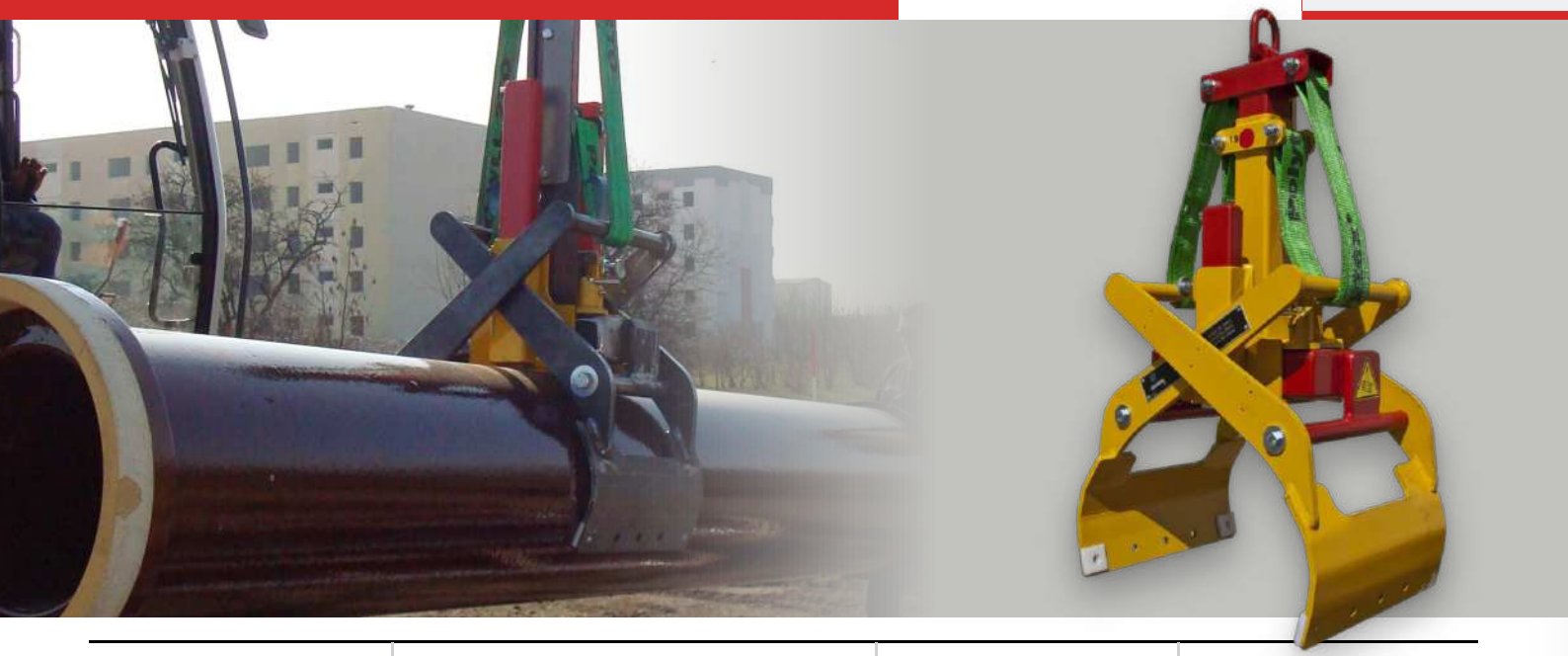

0.4 t	210 – 390 mm	65 kg	80300
Capacity	Pipe OD	Weight	Art. no.

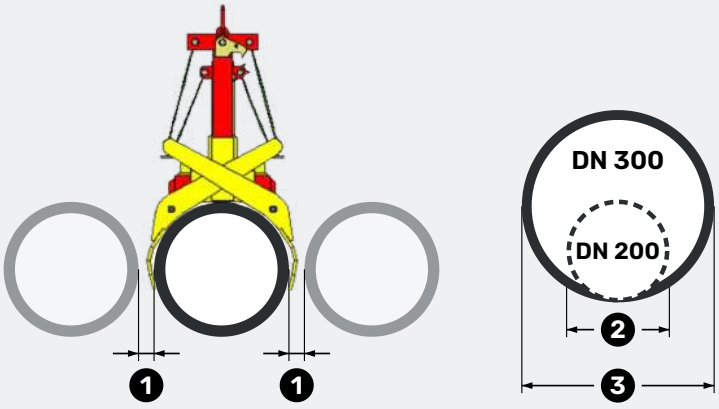

For vitrified clay, cast iron and PVC pipes

DN 200 - DN 300

1. Pipe spacing **min. 20 mm**
2. DN 200 • OD **min. 210 mm**
3. DN 300 • OD **max. 390 mm**

VERSION

DN 200 - DN 300

Vitrified clay, cast iron, PVC pipes

Compatible with pipe pusher, page 16

FEATURES

- ✓ Direct **removal of vitrified clay pipes from the stack without assistants**
- ✓ Quick, **tool-free adjustment** between **DN 200 – DN 300**
- ✓ **Small lateral footprint** when working in trench shoring
- ✓ **Excellent occupational safety**
- ✓ **One-person operation** by the operator
- ✓ Unambiguous **DN-based setting**
- ✓ Ideal for lifting **closely spaced pipes**
- ✓ **Low-maintenance** mechanics

Rohr**Eindrücker**

Pipe pusher with movable push plate

Available with or without attachment adapter

Mechanisation made easy

The perfect way to mechanise: combine it with any mechanical pipe grab such as PipeFIX or MultiFIX.



3D rendering of the pipe pusher

10 t	4 t	300 mm	1,600 mm	110 kg
Push capacity	Hook capacity	ID min. (DN)	OD max.	Weight

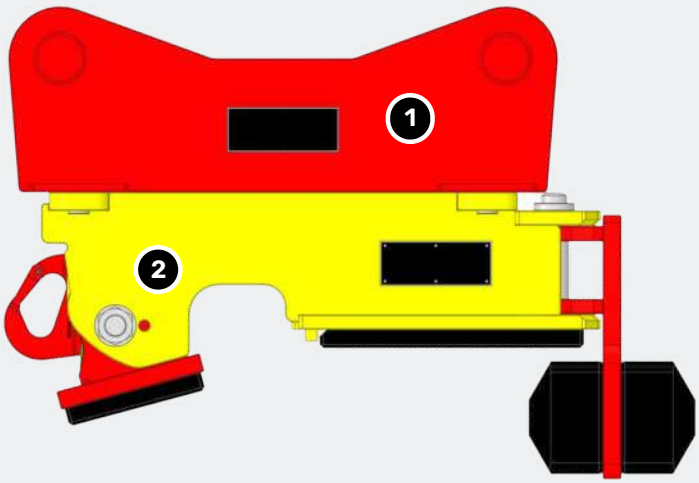

Makes joining pipes of all kinds easier

Mechanical pipe pusher for joining and positioning pipes of all kinds, mainly concrete pipes from DN 300 - OD 1600.

1. Attachment adapters
2. Pipe pusher

VERSION

Pipe pusher
Art. no. 80501

Compatible with attachment adapter, page 39

FEATURES

- ✓ Designed as an **attachment** for **OilQuick** or **LIKUFIX** quick couplers
- ✓ **One-person operation** by the **operator**
- ✓ The **movable push plate** gives the operator an **excellent view** of the laser target, even with **small pipe diameters**
- ✓ **Joining** and **positioning** pipes **without endangering** personnel
- ✓ The **push plate** adapts to the **pipe socket automatically**
- ✓ The **excavator does not need** to be **exactly aligned with the laying direction** when joining pipes

Schmölz SchachtFix & Baugeräte GmbH | Tel. +49 (0) 8349 9720 | vertrieb@schachtfix.info | schacht-fix.de



VerbauGreifer

For OilQuick & LIKUFIX adapters

Available in 4 different working widths

Euro Test

Voluntary type examination based on EU legislation and European standards.

Testing body: DGUV Test, Construction Division.
Mark holder: BG BAU.

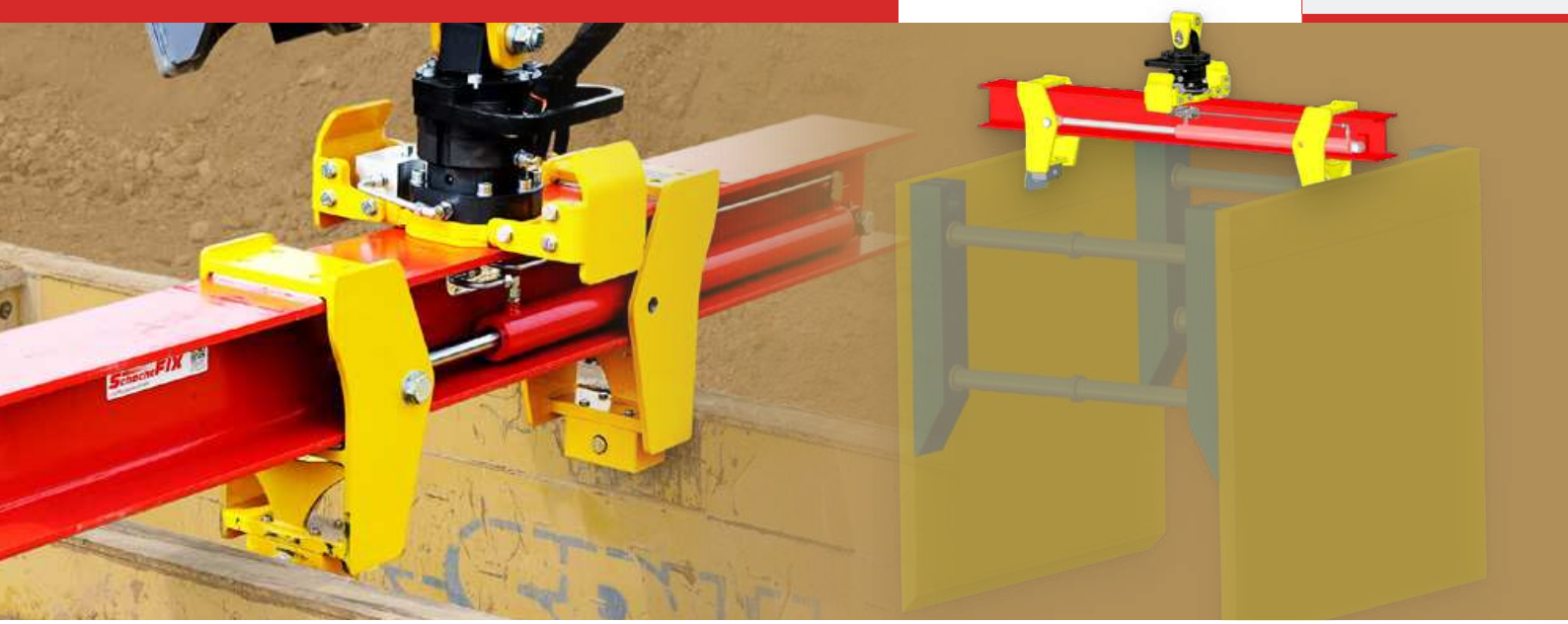

6.4 t	640 – 2,900 mm	1,600 – 3,000 mm	360°
Capacity	Box width	Beam length	Rotation

Beam length to scale

1 m



Art. no.	81430	81420	81410	81400
Beam length	1,600 mm	2,200 mm	2,600 mm	3,000 mm
Box width min.	640 mm	640 mm	640 mm	640 mm
Box width max.	1,500 mm	2,100 mm	2,500 mm	2,900 mm
Capacity	6.4 t	6.4 t	6.4 t	6.4 t
Pressure open	100 bar	100 bar	100 bar	100 bar
Pressure close	100 bar	100 bar	100 bar	100 bar
Pressure rotate	140 bar	140 bar	140 bar	140 bar

Minimum and maximum width

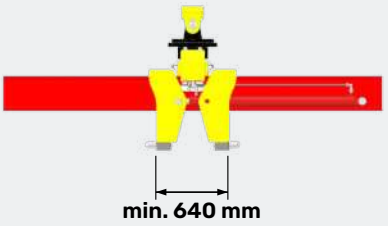

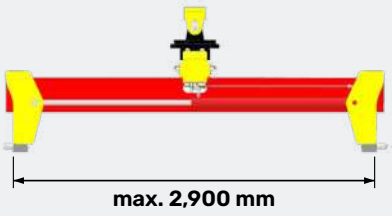

FEATURES

Compatible with attachment adapter, page 36

- ✓ Designed as an **attachment** for **OilQuick** or **LIKUFIX** quick couplers
- ✓ **High swing stability & safe handling** on confined sites
- ✓ **Extends** the use of **existing OilQuick** or **LIKUFIX** quick coupler systems
- ✓ **Hydraulic pick-up** of the trench box, **controlled** from the **cab**
- ✓ **Precise, fast positioning** in the trench without an assistant
- ✓ **Streamlines** and **optimises** the **removal** of **shoring components**
- ✓ **No manual slinging** and **unhooking** of chains when using the trench box grab
- ✓ **360° rotation** via the **integrated rotary motor**
- ✓ **Minimises** the **risk of accidents and injury** on site

Schmölz SchachtFix & Baugeräte GmbH | Tel. +49 (0) 8349 9720 | vertrieb@schachtfix.info | schacht-fix.de





AI-generated

Where we do not yet have current site photos, we show our equipment using modern AI tools – so you can get an accurate picture today.

KabelFIX & KabelFIX Light

Attachment for OilQuick/LIKUFIX adapters

For transporting and unwinding cable drums

Euro Test

Voluntary type examination based on EU legislation and European standards.

Testing body: DGUV Test, Construction Division.
Mark holder: BG BAU.



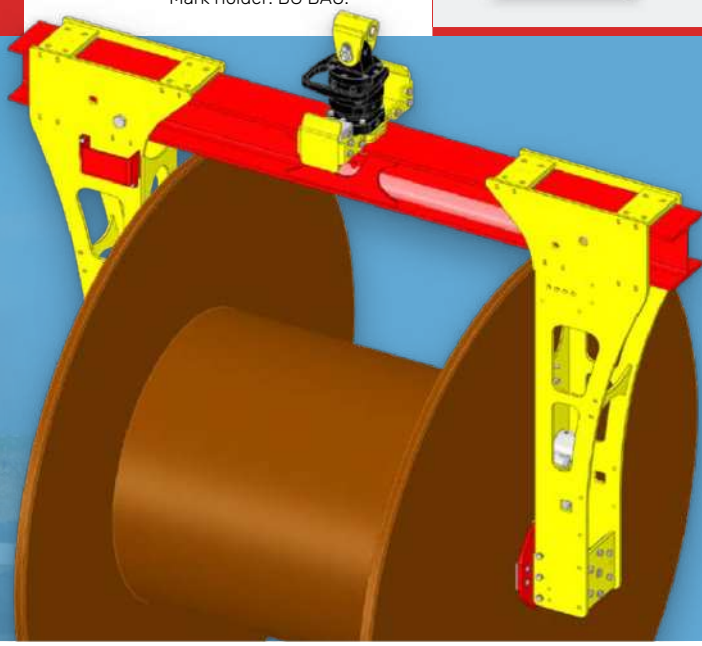

up to 5.5 t	500 – 1,600 mm	up to 2,800 mm	800 – 1,100 kg
Capacity	Drum width	Drum Ø	Weight

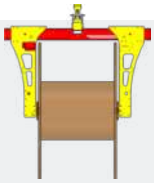

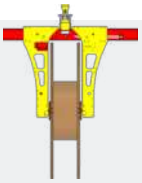

	KabelFIX	KabelFIX Light NEW
Art. no.	80850	80840
Capacity	5.5 t	3 t
Drum width	600 - 1,600 mm	500 - 1,200 mm
Drum Ø	max. 2,800 mm	max. 2,400 mm
Pressure open	100 bar	100 bar
Pressure close	200 bar	200 bar
Rotate unit	140 bar	140 bar
Rotate drum	140 bar	140 bar
Weight	1,100 kg	800 kg

Drum width and drum Ø

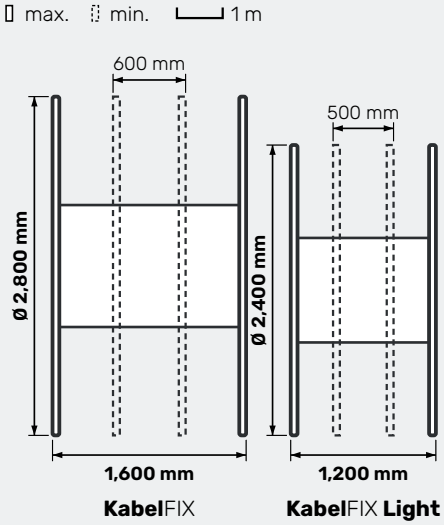

FEATURES

Compatible with attachment adapter, page 36

- ✓ Designed as an **attachment** for **OilQuick** or **LIKUFIX** quick couplers
- ✓ **Precise, fast positioning** of the drum directly above the trench **without an assistant**
- ✓ **360° rotation** via the integrated rotary motor
- ✓ **Extends the use** of existing **OilQuick** or **LIKUFIX** quick coupler systems
- ✓ **Hydraulic pick-up** of the cable drum – controlled from the cab
- ✓ The cable drum is rotated **using the controls in the cab**
- ✓ **Makes** cable **laying** easier
- ✓ **Minimises** the **risk of accidents and injury** on site

GeräteWender / QuickRotator

For efficient work with attachments

designed for OilQuick and LIKUFIX quick coupler systems

Fast exchange

and pick-up-ready positioning / transfer of attachments between 2 excavators on the sewer construction site.



1.5 t	1,750 × 950 mm	360°	500 kg
Capacity	Length × width	Rotation	Weight

Technical data

Parameter	Value
Length	1,750 mm
Width	950 mm
Weight	500 kg

Version

Art. no.	Version
81500	Capacity 1.5 t

Infinitely variable 360° rotation between base and top plate

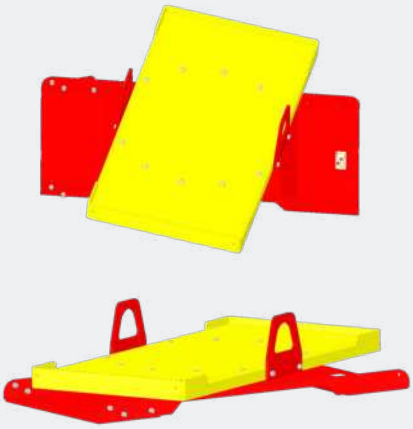

FEATURES

- ✓ Manual **locking pin fixes base and top plate** to each other
- ✓ **Hydraulic pick-up** of attachments from the **cab**
- ✓ **Sturdy transport eyes** for pick-up with the **trench box grab**
- ✓ **Safe handling** on confined sites
- ✓ **Precise, fast placing** and **positioning** in the trench **without an assistant**
- ✓ **Extends** the range of use of **existing OilQuick** or **LIKUFIX quick coupler systems**
- ✓ **Streamlines** and **optimises** the use of attachments on the **sewer construction site**
- ✓ **Minimises** the **risk of accidents and injury** on site

Schmölz SchachtFix & Baugeräte GmbH | Tel. +49 (0) 8349 9720 | vertrieb@schachtfix.info | schacht-fix.de

VerbauHaken

The trench box hook is the solution

for extracting stuck trench boxes

Requirement: extraction eye

Extraction eyes are a requirement for using the hook.



10 t	960 × 400 mm	4 t	80 kg
Pulling hook capacity	Length × width	Chain hook capacity	Weight

Requirement

On boxes with welded-in plates (mount for trench box grab), pull only at the front and rear extraction eyes. Do not pull at the welded-in plate in the middle, as its hole does not go all the way through.

Technical data

Parameter	Value
Length	960 mm
Width	400 mm
Weight	80 kg

Version

Art. no.	Version
80551	Capacity 10 t / 4 t

FEATURES

Compatible with attachment adapter, page 39

- ✓ **One-person operation** by the operator
- ✓ The **operator** can **thread** the hook into the **3rd extraction eye unassisted**
- ✓ **Powerful**
- ✓ **Saves personnel** and **costs**
- ✓ **Increases safety** on the **site**
- ✓ **Short pulling distance**
- ✓ **Low-maintenance** design
- ✓ **Personnel** no longer need to stay in the **danger zone** of the **excavator**

Platten**Greifer**

Shoring panel grab

for OilQuick & LIKUFIX adapters

Euro Test

Voluntary type examination based on EU legislation and European standards.

Testing body: DGUV Test, Construction Division.
Mark holder: BG BAU.



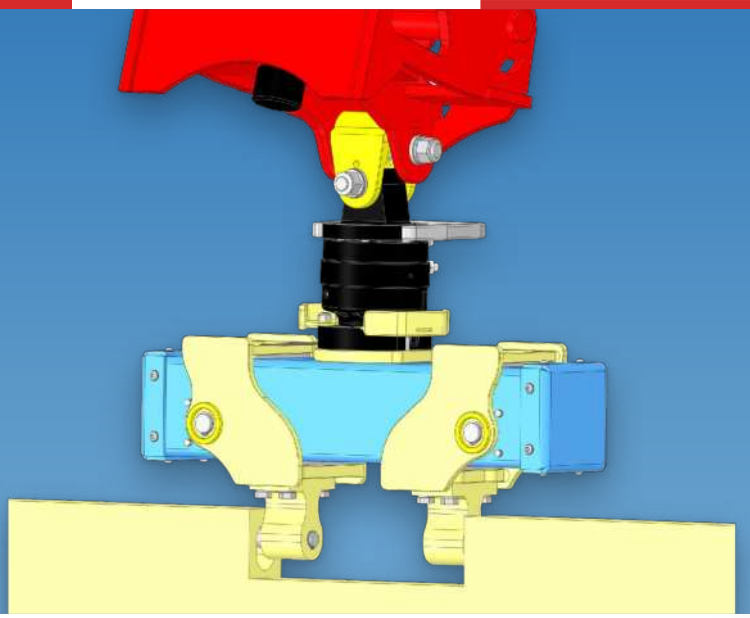

6.4 t	**510 mm**	**360°**	**150 kg**
Capacity	Mounting bush spacing	Rotation	Weight

Technical data

Parameter	Value
Spacing of the mounting bushes on the shoring panel	510 mm
Pressure open	100 bar
Pressure close	100 bar
Pressure rotate	140 bar
Weight	150 kg

Version

Art. no.	Version
81450	Capacity 6.4 t

360° rotation via the integrated rotary motor

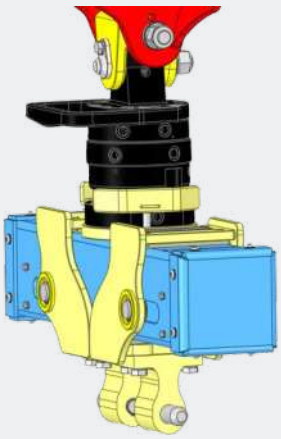

FEATURES

Compatible with attachment adapter, page 36

- ✓ Designed as an **attachment** for **OilQuick** or **LIKUFIX** quick couplers
- ✓ **Hydraulic pick-up** of the shoring panels – controlled from the cab
- ✓ **No** manual **slinging** and **unhooking** of **chains**
- ✓ **High swing stability**
- ✓ **Safe handling** on confined sites
- ✓ **Precise, fast positioning** in the trench without an assistant
- ✓ **Extends** the range of use of existing **OilQuick** or **LIKUFIX** quick coupler systems
- ✓ **Minimises** the **risk of accidents and injury** on site
- ✓ **Streamlines** and **optimises** the **removal** of shoring components

Schmölz SchachtFix & Baugeräte GmbH | Tel. +49 (0) 8349 9720 | vertrieb@schachtfix.info | schacht-fix.de

IN ACTION





SOLD
ONLY VIA
SBH



SchachtFIX SW

Automatic manhole grab

With stepping mechanism, specially for precast plants

Euro Test

Voluntary type examination based on EU legislation and European standards.

Testing body: DGUV Test, Construction Division.
Mark holder: BG BAU.

ID to scale



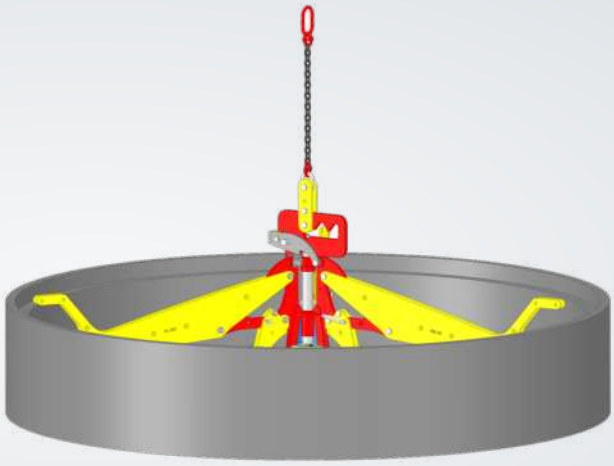

2.5 t	600 – 2,500 mm	DN 1200	BG BAU
Max. capacity	Manhole units ID	Cones and bases max.	subsidised

Versions and technical data

Art. no.	Version	Manhole units ID	Capacity
80080	SchachtFIX SW base unit	600 / 625 / 800 mm	
80100	SchachtFIX SW / -V- 3 extensions 1500	1,000 mm	2.5 t
		1,200 / 1,500 mm	2.0 t
80110	SchachtFIX SW 3 extensions 2000	2,000 mm	2.0 t
80120	SchachtFIX SW 3 extensions 2500	2,500 mm	2.0 t

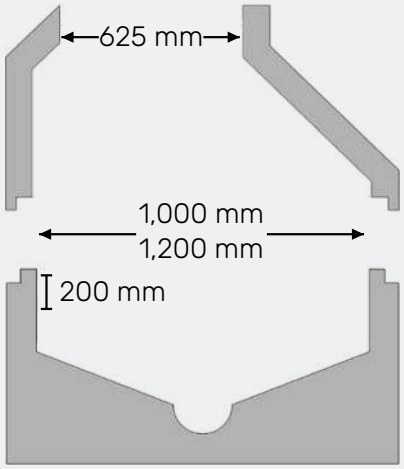

FEATURES

- ✓ **Manhole cones** and **bases** up to **DN 1200** can be lifted
- ✓ All **manhole units**, especially cones, **hang** perfectly **level**
- ✓ **Low-wear** thanks to high-quality workmanship
- ✓ **Quick payback** through time and cost savings
- ✓ Mechanical **hooking and unhooking** by the operator alone, **without** additional **personnel**
- ✓ **No protruding parts** outside the rings
- ✓ **Simple** and reliable **handling**

– BG BAU –

SUBSIDISED

Work safely with SchachtFIX – and get a subsidy! BG BAU (German statutory accident insurance for construction) supports companies buying SchachtFIX systems. We are happy to help with the paperwork.

1. Check eligibility
2. Request a quote from us
3. Apply to BG BAU
4. Buy the unit, receive the subsidy

SchachtFIX 1000

Automatic manhole grab

for precast manhole units

Euro Test

Voluntary type examination based on EU legislation and European standards.

Testing body: DGUV Test, Construction Division.
Mark holder: BG BAU.

The **SchachtFIX manhole grab** is designed for level **lifting, moving and lowering** of manhole rings and bases from **DN 600 - DN 1000**

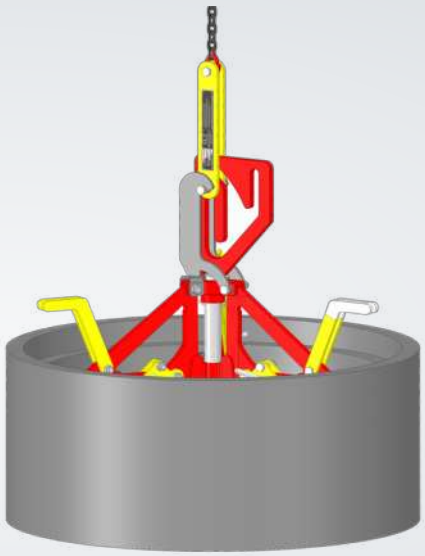

2.5 t	**600 – 1,000 mm**	**DN 1000**	**BG BAU**
Capacity	Manhole units ID	Cones and bases max.	subsidised

Versions and technical data

Art. no.	Version	Manhole units ID	Capacity
80000	SchachtFIX -V- base unit	600 / 625 / 800 mm	2.5 t
80010	3 supports 1000	1,000 mm	2.5 t
Weight		100 kg	

For round precast manhole units

ID from 600 mm - 1,000 mm

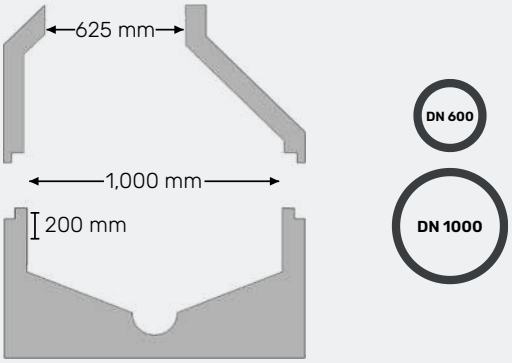

FEATURES

- ✓ Suitable for **manhole rings** with an ID of **600, 625, 800, 1,000 mm**
- ✓ Mechanical **hooking and unhooking by** the **operator** alone, without additional **personnel**
- ✓ **No protruding parts** outside the rings
- ✓ **Simple** and reliable **handling**
- ✓ **Manhole cones** and **bases** up to **max. DN 1000** can be lifted
- ✓ All **manhole units**, especially cones, **hang** perfectly **level**
- ✓ **Low-wear** thanks to high-quality workmanship
- ✓ **Quick payback** through time and cost savings

- BG BAU -
SUBSIDISED

Work safely with SchachtFIX – and get a subsidy! BG BAU (German statutory accident insurance for construction) supports companies buying SchachtFIX systems. We are happy to help with the paperwork.

1. Check eligibility
2. Request a quote from us
3. Apply to BG BAU
4. Buy the unit, receive the subsidy

Schmölz SchachtFix & Baugeräte GmbH | Tel. +49 (0) 8349 9720 | vertrieb@schachtfix.info | schacht-fix.de

SchachtFIX 1500

Automatic manhole grab

for precast manhole units

Euro Test

Voluntary type examination based on EU legislation and European standards.

Testing body: DGUV Test, Construction Division.
Mark holder: BG BAU.



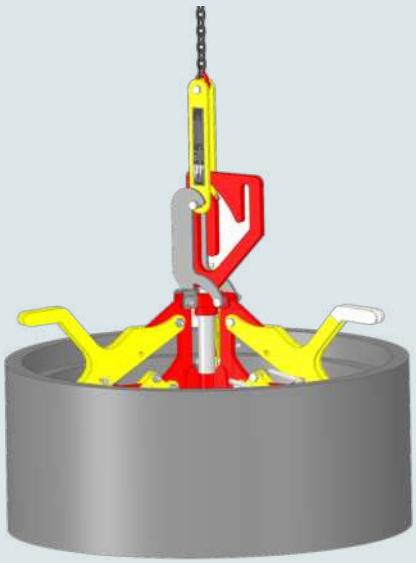

2.5 t	600 – 1,500 mm	DN 1200	BG BAU
Max. capacity	Manhole units ID	Cones and bases max.	subsidised

Versions and technical data

Art. no.	Version	Manhole units ID	Capacity
80000	SchachtFIX -V- base unit	600 / 625 / 800 mm	2.5 t
80010	3 supports 1000	1,000 mm	2.5 t
80100	SchachtFIX SW / -V- 3 extensions 1500	1,000 mm	2.5 t
		1,200 / 1,500 mm	2.0 t
Bases max.		DN 1200	
Cones max.		DN 1200	
Weight		100 kg	

For round precast manhole units

ID from 600 mm - 1,500 mm

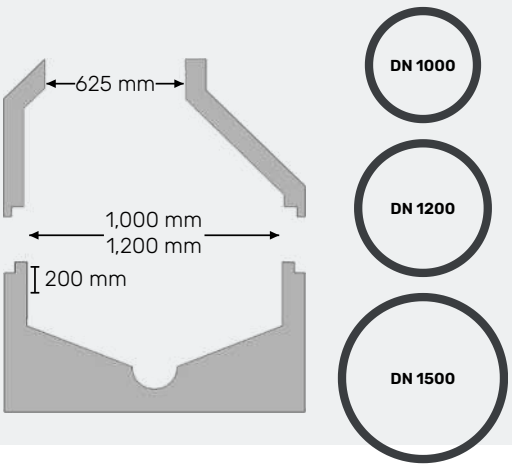

FEATURES

- ✓ Suitable for **manhole rings** with an internal diameter of **Ø 600, 625, 800, 1,000, 1,200** and **1,500 mm**
- ✓ Mechanical **hooking and unhooking** by the operator alone, **without** additional **personnel**
- ✓ **No protruding parts** outside the rings
- ✓ **Simple** and reliable **handling**
- ✓ **Manhole cones** and **bases** up to **max. DN 1200** can be lifted
- ✓ All **manhole units**, especially cones, **hang** perfectly **level**
- ✓ **Low-wear** thanks to high-quality workmanship
- ✓ **Quick payback** through time and cost savings

– BG BAU –
SUBSIDISED

Work safely with SchachtFIX – and get a subsidy! BG BAU (German statutory accident insurance for construction) supports companies buying SchachtFIX systems. We are happy to help with the paperwork.

1. Check eligibility
2. Request a quote from us
3. Apply to BG BAU
4. Buy the unit, receive the subsidy

SenkkastenFIX

Mechanical grab

for gully bases

Protects the spine

of your workers and helps to avoid sickness-related absences.

Simple & safe to use.



0.25 t	450 mm	5 kg	80150
Capacity	Manhole units ID	Weight	Art. no.

Technical data

Parameter	Value
Manhole units ID	450 mm
Weight	5 kg

Version

Art. no.	Version
80150	Capacity 0.25 t



FEATURES

- ✓ **Gully base** always **hangs level**
- ✓ **Protects** the **spine** and thus **avoids** sickness-related **absences**
- ✓ **No protruding parts** outside the manhole units
- ✓ **Simple** and **safe handling**
- ✓ **Low-wear** thanks to high-quality workmanship
- ✓ **Low weight**
- ✓ **Quick payback** through time and cost savings

Schmölz SchachtFix & Baugeräte GmbH | Tel. +49 (0) 8349 9720 | vertrieb@schachtfix.info | schacht-fix.de

SchachtFIX Light

Mechanical manhole grab

for upright concrete pipes and road gully bases with silt trap

Euro Test

Voluntary type examination based on EU legislation and European standards.

Testing body: DGUV Test, Construction Division.
Mark holder: BG BAU.



0.4 t	450 mm	30 kg	80160
Capacity	Manhole units ID	Weight	Art. no.

Technical data

Parameter	Value
Manhole units ID	450 mm
Weight	30 kg

Version

Art. no.	Version
80160	Capacity 0.4 t



FEATURES

- ✓ **Hooking and unhooking by** the operator alone, **without** additional **personnel**
- ✓ **Simple** and **reliable handling**
- ✓ **Manhole unit** always **hangs level**
- ✓ **No protruding parts** outside the manhole units
- ✓ **Low weight**
- ✓ **Low-wear** thanks to high-quality workmanship
- ✓ **Quick payback** through time and cost savings

BeGu**FIX**

Lifting device for lifting, moving and lowering

BeGu manhole covers class D400 and B125 and adjusting rings

Euro Test

Voluntary type examination based on EU legislation and European standards.

Testing body: DGUV Test, Construction Division.
Mark holder: BG BAU.

Tool-free adjustment to the required standard size



0.2 t	**19 kg**	**80600**	**BG BAU**
Capacity	Weight	Art. no.	subsidised

Manhole frame



Class B125 – class D400

ID	605 mm
OD	720 – 790 mm
Weight	110 kg

Manhole cover

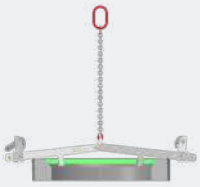

Class D400

ID	605 mm
OD	785 mm
Weight	90 kg

Adjusting ring



New and old DIN standard

ID	605 mm
OD	790 – 825 mm
Weight	40 mm – 24 kg 60 mm – 38 kg 80 mm – 51 kg 100 mm – 63 kg

FEATURES

- ✓ **Manhole unit** always **hangs level**
- ✓ **Low weight**
- ✓ **Low-wear** thanks to high-quality workmanship
- ✓ **Simple** and **reliable handling**
- ✓ **Back-friendly**
- ✓ **Quick payback** through time and cost savings

– BG BAU –

SUBSIDISED

up to 50% of the purchase cost, max. €250 per measure

Spare your back with BeGuFIX – and get a subsidy! BG BAU (German statutory accident insurance for construction) supports companies buying back-friendly aids such as BeGuFIX.

1. Check eligibility
2. Request a quote from us
3. Apply to BG BAU
4. Buy the unit, receive the subsidy

Schmölz SchachtFix & Baugeräte GmbH | Tel. +49 (0) 8349 9720 | vertrieb@schachtfix.info | schacht-fix.de

BeGu**FIX** 800

Lifting device for lifting, moving and lowering

MG manhole covers class D 400 / clear opening 800 mm

Euro Test

Voluntary type examination based on EU legislation and European standards.

Testing body: DGUV Test, Construction Division.
Mark holder: BG BAU.

Tool-free adjustment to the required standard size

Utility model **protected**

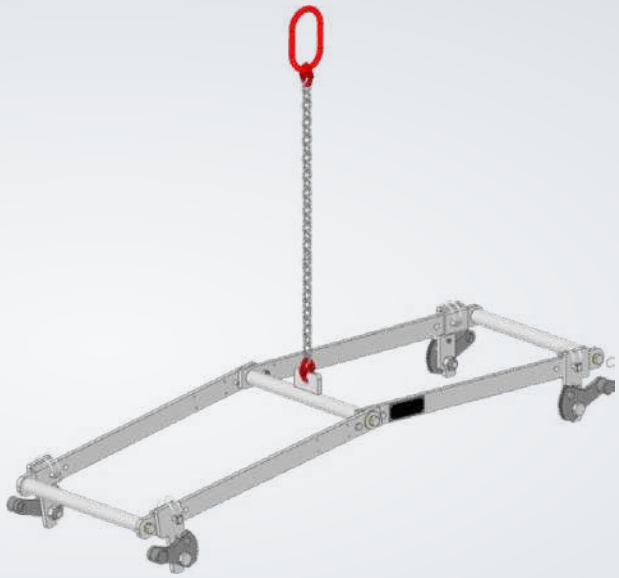

0.2 t	**20 kg**	**80610**	**BG BAU**
Capacity	Weight	Art. no.	subsidised

MG manhole cover

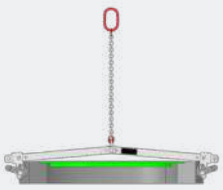

Class D 400 / CO 800 mm

ID	800 mm
OD	980 mm
Weight	200 kg

Adjusting ring



CO 800

ID	CO 800 mm
OD	1,040 mm
Weight	60 mm – 50 kg 80 mm – 66 kg 100 mm – 85 kg

FEATURES

- **Manhole unit** always **hangs level**
- **Low weight**
- **Low-wear** thanks to high-quality workmanship
- **Simple** and **reliable handling**
- **Back-friendly**
- **Quick payback** through time and cost savings

– BG BAU –

SUBSIDISED

up to 50% of the purchase cost, max. €250 per measure

Spare your back with BeGuFIX – and get a subsidy! BG BAU (German statutory accident insurance for construction) supports companies buying back-friendly aids such as BeGuFIX.

1. Check eligibility
2. Request a quote from us
3. Apply to BG BAU
4. Buy the unit, receive the subsidy


AI-generated

Transport**Gestelle**

Solution for transporting and storing the lifting devices
for HydroFIX, HydroFIX Light, VerbauGreifer and KabelFIX



Fast and safe transport
to and from the site

There is a matching transport rack for HydroFIX, HydroFIX Light, VerbauGreifer and KabelFIX. The attachment adapter, head and arm sets are stowed completely inside it.

The rack is picked up with the quick coupler or the pallet forks, protects the units from damage and is easy to stack.

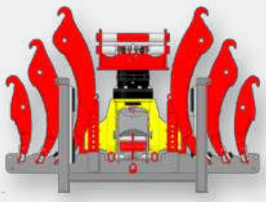

HydroFIX transport rack

Attachment adapter + HF head + 3 arm sets

Art. no. 80951

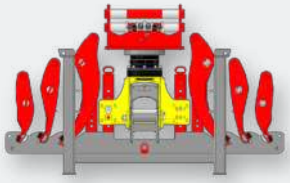

HydroFIX Light transport rack

Attachment adapter + HF-L head + 3 arm sets

Art. no. 80998

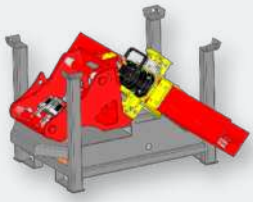

VerbauGreifer transport rack

Art. no. 81440

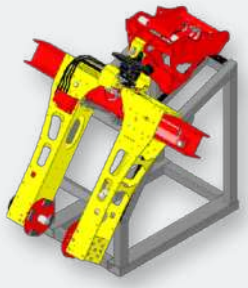

KabelFIX & KabelFIX light transport rack

Art. no. 80860

FEATURES

- ✓ **Ideal** for **fast** and **safe pick-up** with the quick coupler
- ✓ **Load pick-up** with the **pallet forks**
- ✓ **Protection against damage** from incorrect storage
- ✓ **Safe storage** on site and in the yard
- ✓ **Easy handling** and **stackable**

Geräte**Adapter** MFK

for OilQuick and LIKUFIX quick couplers

Capacity 10 t • max. oil pressure 300 bar

Available for

OILQUICK®

LIKUFIX

OILQUICK®

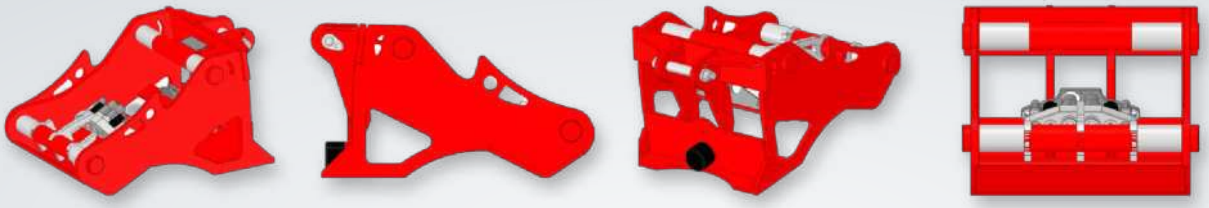

LIKUFIX

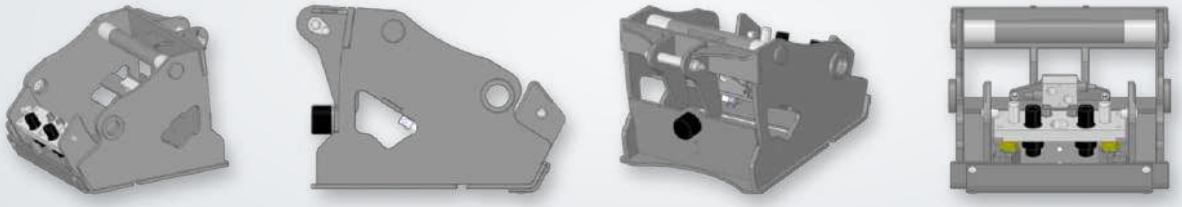



OILQUICK®

Versions and technical data

ART. NO.	VERSION	CAPACITY	MAX. OIL PRESSURE	WEIGHT
81550	OQ-80-MFK	10 t	300 bar	300 kg
81555	OQ-70/55-MFK	10 t	300 bar	260 kg
81560	OQ-70-MFK	10 t	300 bar	250 kg
81565	OQ-65-MFK	10 t	300 bar	200 kg
81570	OQ-60-5-MFK	10 t	300 bar	180 kg
81575	OQ-60-4-MFK	10 t	300 bar	180 kg



LIKUFIX

Versions and technical data

ART. NO.	VERSION	CAPACITY	MAX. OIL PRESSURE	WEIGHT
81850	SW-66-MFK	10 t	300 bar	400 kg
81860	SW-48-MFK	10 t	300 bar	300 kg
81870	SW-33-MFK	10 t	300 bar	230 kg

COMPATIBLE WITH THESE MACHINES

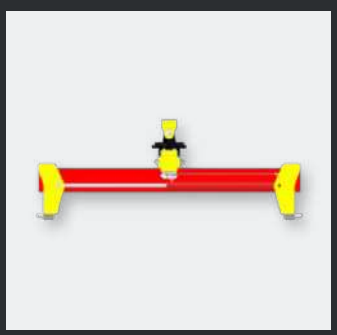

VerbauGreifer

Page 18

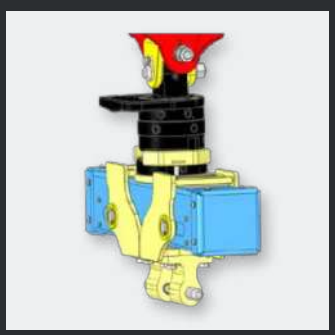

PlattenGreifer

Page 24



HydroFIX & HydroFIX light

Page 4 / 6

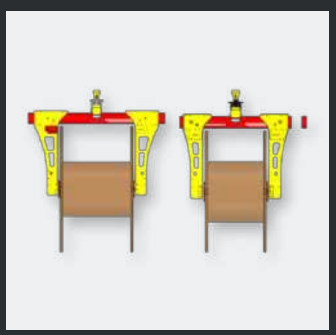

KabelFIX & KabelFIX light

Page 20

Schmölz SchachtFix & Baugeräte GmbH | Tel. +49 (0) 8349 9720 | vertrieb@schachtfix.info | schacht-fix.de

GeräteAdapter S-10°

for OilQuick and LIKUFIX quick couplers

Capacity 5.5 t to 8 t • max. oil pressure 300 bar

Available for

OILQUICK®

LIKUFIX

OILQUICK®

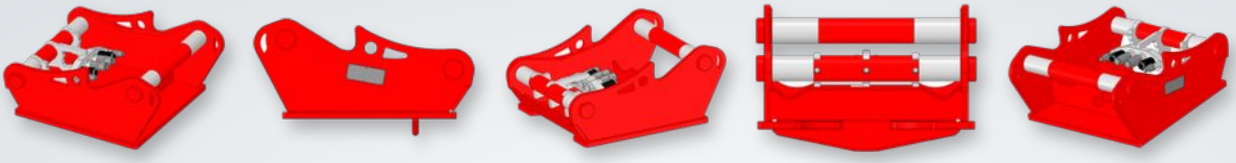

LIKUFIX

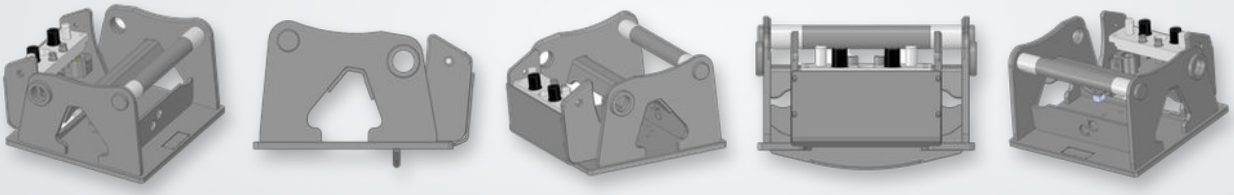



OILQUICK®

Versions and technical data

ART. NO.	VERSION	CAPACITY	MAX. OIL PRESSURE	WEIGHT
81600	OQ-80-S-10°	8 t	300 bar	280 kg
81605	OQ-70/55-S-10°	8 t	300 bar	240 kg
81610	OQ-70-S-10°	8 t	300 bar	230 kg
81615	OQ-65-S-10°	8 t	300 bar	180 kg
81620	OQ-60-5-S-10°	5.5 t	300 bar	160 kg
81625	OQ-60-4-S-10°	5.5 t	300 bar	160 kg
81630	OQ-45-5-S-10°	5.5 t	300 bar	150 kg
81635	OQ-45-4-S-10°	5.5 t	300 bar	150 kg



LIKUFIX

Versions and technical data

ART. NO.	VERSION	CAPACITY	MAX. OIL PRESSURE	WEIGHT
81900	SW-66-S-10°	8 t	300 bar	210 kg
81910	SW-48-S-10°	8 t	300 bar	220 kg
81920	SW-33-S-10°	5.5 t	300 bar	160 kg

COMPATIBLE WITH THESE MACHINES

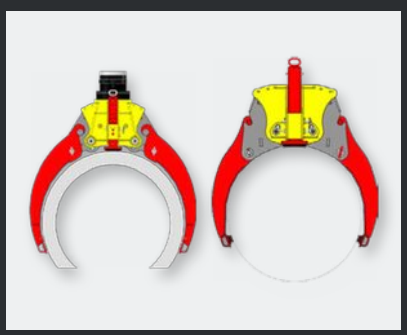

HydroFIX & HydroFIX light

Page 4 / 6

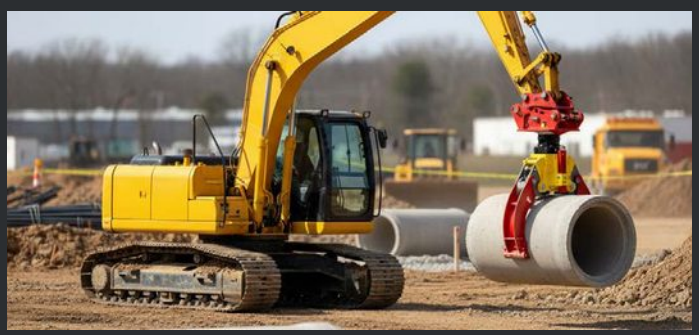

HydroFIX in action

Page 4

GeräteAdapter S-42°

for HydroFIX casing pipe grab

OilQuick, LIKUFIX and wheel loader adapters

Available for

OILQUICK®

LIKUFIX

OILQUICK®







LIKUFIX

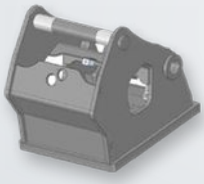
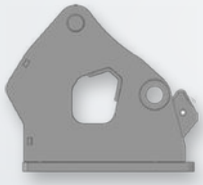
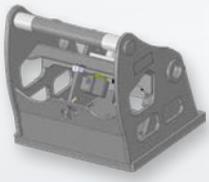





OILQUICK®

Versions and technical data

ART. NO.	VERSION	CAPACITY	MAX. OIL PRESSURE	WEIGHT
81601	OQ-80-S-42°	7.5 t	300 bar	465 kg
81606	OQ-70/55-S-42°	7.5 t	300 bar	320 kg



LIKUFIX

Versions and technical data

ART. NO.	VERSION	CAPACITY	MAX. OIL PRESSURE	WEIGHT
81905	SW-66-S-42°	7.5 t	300 bar	460 kg
81915	SW-48-S-42°	7.5 t	300 bar	350 kg

Rotator **82015** Weight 135 kg

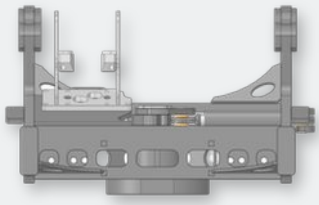

Wheel loader adapter

Versions and technical data

ART. NO.	VERSION	CAPACITY	MAX. OIL PRESSURE	WEIGHT
82000	L90 without LIKUFIX	5.5 t	250 bar	440 kg
82001	L90 with LIKUFIX	5.5 t	250 bar	470 kg
82005	L120 without LIKUFIX	5.5 t	250 bar	–
82006	L120 with LIKUFIX	5.5 t	250 bar	–

COMPATIBLE WITH THESE MACHINES



HydroFIX casing pipe grab

4 gripping arm sets from OD 200 to OD 1500

Page 8



Wheel loader L90 and L120

L90 and L120 with casing pipe grab OD 540 – OD 880 and OD 600 – OD 1200

Page 9

Schmölz SchachtFix & Baugeräte GmbH | Tel. +49 (0) 8349 9720 | vertrieb@schachtfix.info | schacht-fix.de

GeräteAdapter Rahmen

for pipe pusher and VerbauHaken

Capacity 10 t

Available for

OILQUICK®

LIKUFIX

OILQUICK®

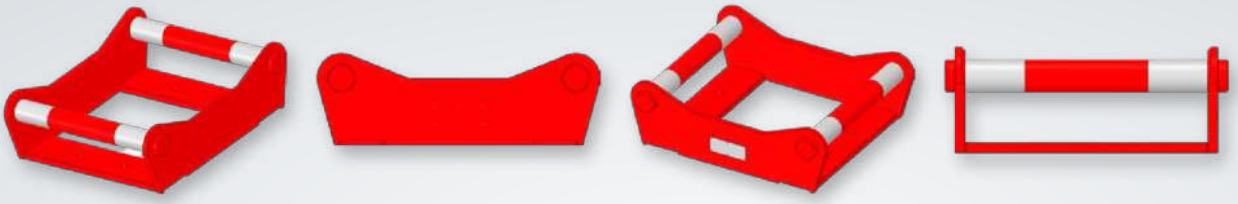

LIKUFIX

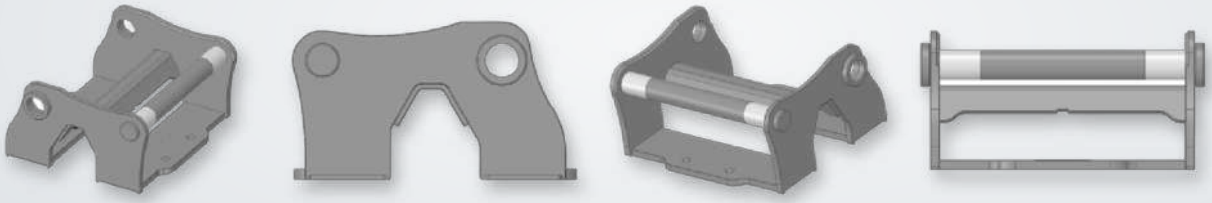



OILQUICK®

Versions and technical data

ART. NO.	VERSION	CAPACITY	WEIGHT
81650	OQ-80 Rahmen	10 t	150 kg
81655	OQ-70/55 Rahmen	10 t	130 kg
81660	OQ-70 Rahmen	10 t	120 kg
81665	OQ-65 Rahmen	10 t	100 kg
81670	OQ-60 Rahmen	10 t	90 kg



LIKUFIX

Versions and technical data

ART. NO.	VERSION	CAPACITY	WEIGHT
81950	SW-66 Rahmen	10 t	190 kg
81960	SW-48 Rahmen	10 t	115 kg
81970	SW-33 Rahmen	10 t	80 kg

COMPATIBLE WITH THESE MACHINES



RohrEindrücker

Page 16

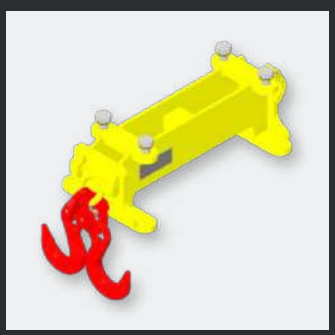

VerbauHaken

Page 23



RohrEindrücker with frame adapter

Page 16



Tell us what you want to lift.

Pipe, manhole or shoring panel: we will find the right attachment for your excavator and your job site.

PHONE
+49 8349 97699-14

EMAIL
vertrieb@schachtfix.info

WEBSITE
schacht-fix.de

View all products online

Schmölz SchachtFIX & Baugeräte GmbH
Stötten am Auerberg

Schmölz SchachtFIX und Baugeräte GmbH